低阻值電阻器
LOW OHMWiRE RESISTORS

CM

特 点

- □适用电源回路等电流检出
- □尺寸小且重量轻
- □欢迎客户订制
- □使用温度范围:-40℃~+200℃

Features

- ☐ Current detective resistor for power supply circuit,etc.
- ☐ Small size and light weight
- ☐ Customer's design are welcomed
- ☐ Operating temperature range:-40℃~+200℃

规格 Specifications

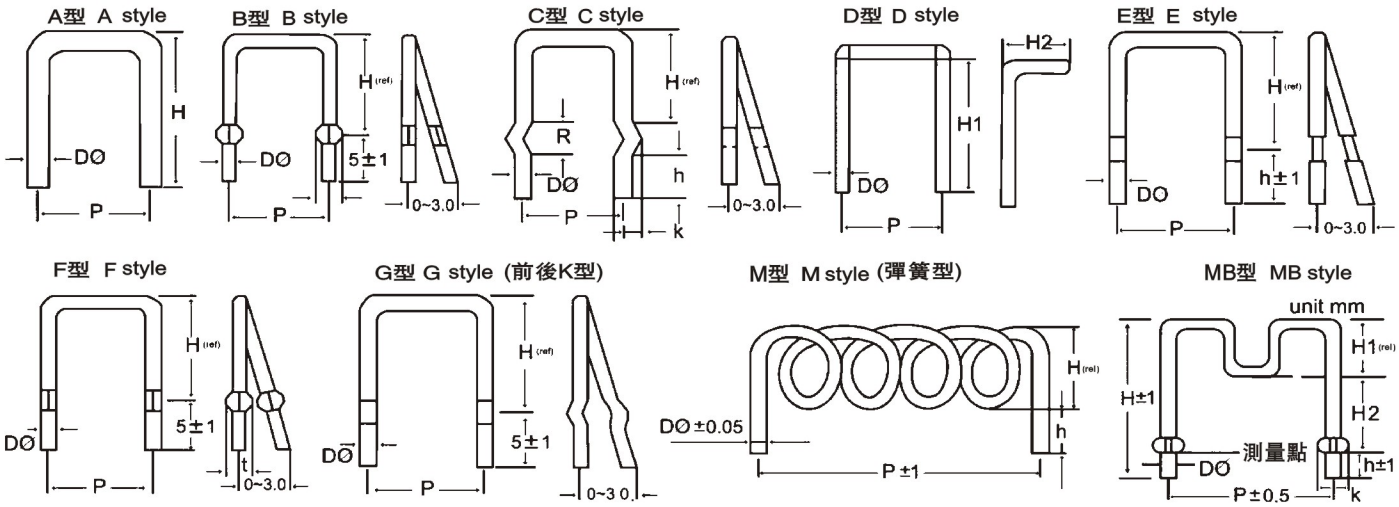

注：外型尺寸、线径、测量点可根据设计要求或客户要求设定。
As for demention diameter measure point with design requirement or customer requirement

经 径 ψd(mm)	最大额定电流（A） Max Current Rating	阻值范围（mΩ） Resistance Range		容许误差值 Resistance Tolerance	温度系数 T.C.R(ppm/℃)
		Copper-Manganese	Copper-Nickel		
0.4	2.0	70mΩ~200mΩ	80mΩ~220mΩ	J(±5%) K(±10%)	±100ppm/℃)
0.5	2.5	50mΩ~150mΩ	60mΩ~165mΩ		
0.6	3.0	50mΩ~100mΩ	60mΩ~110mΩ		
0.7	4.0	30mΩ~70mΩ	35mΩ~75mΩ		
0.8	4.5	20mΩ~50mΩ	25mΩ~55mΩ		
0.9	5.0	20mΩ~40mΩ	25mΩ~40mΩ		
1.0	5.5	15mΩ~30mΩ	20mΩ~30mΩ		
1.1	6.0	15mΩ~20mΩ	16mΩ~22mΩ		
1.2	7.0	10mΩ~20mΩ	12mΩ~22mΩ		
1.3	7.5	10mΩ~20mΩ	12mΩ~22mΩ		
1.4	8.0	10mΩ~20mΩ	12mΩ~22mΩ		
1.5	9.0	10mΩ~20mΩ	12mΩ~22mΩ		
1.6	9.5	10mΩ~15mΩ	12mΩ~16mΩ		
1.8	11	5mΩ~10mΩ	6mΩ~11mΩ		
2.0	12	3mΩ~10mΩ	6mΩ~11mΩ		
2.5	14	2mΩ~5mΩ	3.5mΩ~5.5mΩ		

品名构成 Product Identification

CM(CN)	0.8Ø	12mΩ	J(±5%)	A
种类 Type	直径 Diameter	公称抵抗值 Resistance	容许误差值 Tolerance	形状 Form

容许误差值 Tolerance

J	K
±5%	±10%

A型	B型	C型	D型
E型	F型	G型	